S711 Buddha

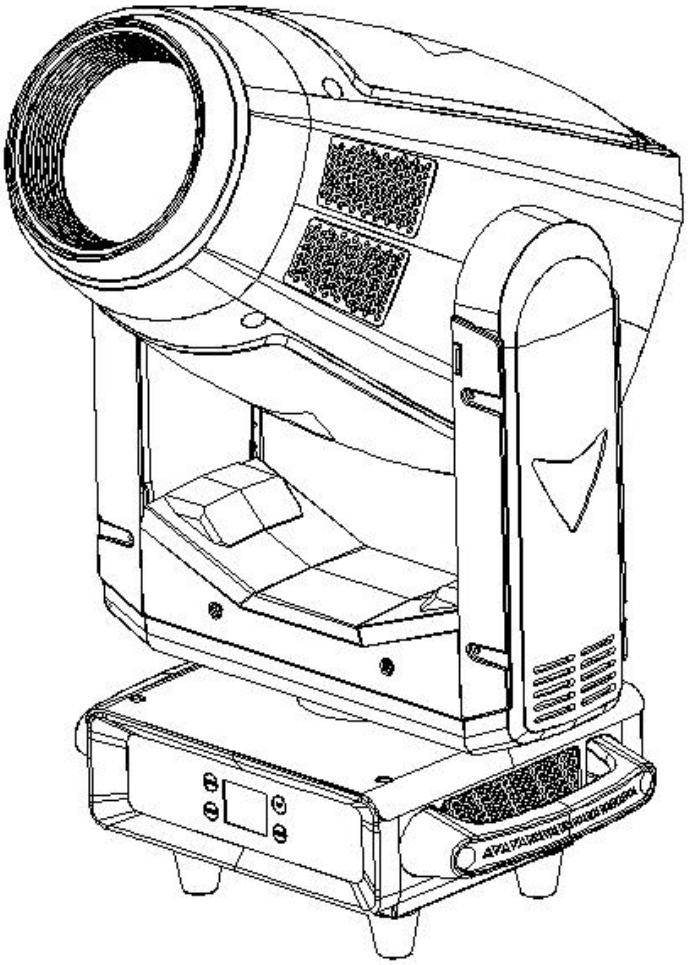

User Manual

1. Safety Instructions

Please read the instruction carefully which includes important information about the installation, usage and maintenance.

Please keep this User Guide for future consultation. If you sell the unit to another user, be sure that they also receive this instruction manual.

Important:

Damages caused by the disregard of this user manual are not subject to warranty. The dealer will not accept liability for any resulting defects or problems.

Unpack and check carefully to ensure that there is no transportation damage before using the unit.

This product is for indoor use only. Use only in a dry location.
DO install and operate by qualified operator.
DO NOT allow children to operate the fixture.
Use safety chain when fixing the unit. Handle the unit by carrying its base instead of head only.
The unit must be installed in a location with adequate ventilation, at least 50cm from adjacent surfaces.
Be sure that no ventilation slots is blocked, otherwise the unit will be overheated.
Before operation, ensure that you are connecting this product to the proper voltage in accordance with the specifications in this manual or on the product's specification label.
It's important to ground the yellow/green conductor to earth in order to avoid electric shock.
Minimum ambient temperature TA: 0℃. Maximum ambient temperature TA: 40℃. Do not operate this product at a lower or higher temperature.
DO NOT connect the device to any dimmer pack.
Keep flammable materials away from the fixture while operating to avoid fire hazard. Make sure the power cord is not crimped or damaged; replace it immediately if damaged.
Unit's surface temperature may reach up to 65℃. DO NOT touch the housing bare-handed during its operation
Avoid any flammable liquids, water or metal from entering the unit. Once it happens, cut off the mains power immediately.
DO NOT operate in a dirty or dusty environment. DO clean the fixture regularly.
DO NOT touch any wire during operation as there might be a hazard of electric

shock.
Avoid entanglement of the power cord with other wires.
The minimum distance to objects/surface must be more than 3 meters.
Disconnect mains power before fuse/lamp replacement or servicing.
Replace fuse/lamp only with the same type.
In the event of serious operating problem, stop using the unit immediately.
Never turn on and off the unit time after time.
The housing, the lenses, or the ultraviolet filter must be replaced if they are visibly damaged.
DO NOT open the housing as there are no user serviceable parts inside.
DO NOT attempt to operate this unit if it becomes damaged. DO NOT attempt any repairs
yourself. Repairs carried out by unskilled people can lead to damage or malfunction. Please contact the nearest authorized technical assistance center if needed.
Disconnect this product from its power source before servicing.
DO use the original packaging if the device is to be transported.
DO replace the bulb once it is damaged, deformed or life-expired.
Avoid direct eye exposure to the light source while the product is on.
DO NOT operate this product if you see damage on the housing, shields, or cables. Have the damaged parts replaced by an authorized technician at once
Installation:
The fixture should be fixed on the clamp. Always ensure that the unit is firmly fixed to avoid vibration and slipping off during operation. Ensure that the trussing or area of installation must be able to hold 10 times the weight without any deformation. Always install a safety cable that can hold at least 12 times the weight of the fixture when installing.DO install and operate by qualified operator. It must be installed in a place where there is out of the reach of people.

2. DMX-512 control connections

1. At last unit, the DMX cable has to be terminated with a terminator. Solder a 120-ohm 1/4W
resistor between pin 2(DMX-) and pin 3(DMX+) into a 3-pin XLR-plug and plug it in the DMX-output
of the last unit.
2. Connect the unit together in a “daisy chain” by XLR plug cable from the output of the unit to
the input of the next unit. The cable can only be used in series and cannot be connected in parallel.
DMX 512 is a very high-speed signal. Inadequate or damaged cables,

soldered joints or corroded
connectors can easily distort the signal and shut down the system.
3. The DMX output and input connectors are pass-through to maintain the DMX circuit, when one
of the units' power is disconnected.
4. Each lighting unit needs to have a DMX address to receive the data by the controller. The
address number is between 1-512.
5. The end of the DMX 512 system should be terminated to reduce signal errors.
6. 3 pin XLR connectors are more popular than 5 pins XLR.
3 pin XLR: Pin 1: GND, Pin 2: Negative signal (-), Pin 3: Positive signal (+)
5 pin XLR: Pin 1: GND, Pin 2: Negative signal (-), Pin 3: Positive signal (+), Pin4, Pin5 not used

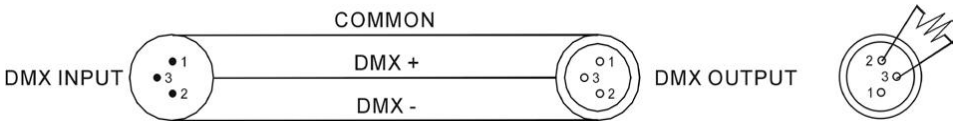

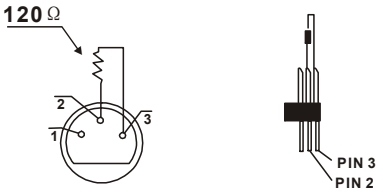

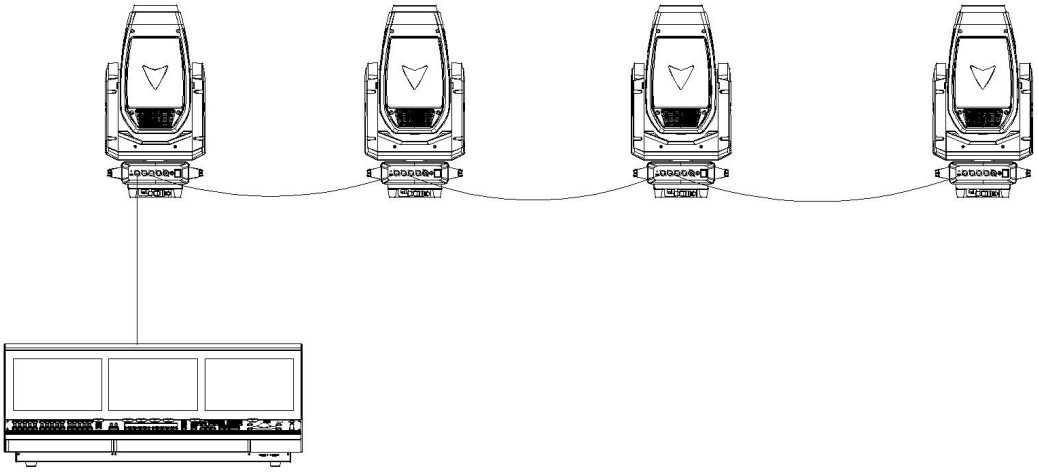

3.Address code setting

If you use a universal DMX controller to control the units, you have to set DMX address from 1 to 512 so that the units can receive DMX signal.
Press the MENU button to enter menu mode, select DMX Settings, press the ENTER button to confirm, use the UP/DOWN button to select DMX Address, press the ENTER button to confirm, the present address will blink in the display, use the UP/DOWN button to adjust the address from 001 to 512, press the ENTER button to store. Press the MENU button back to the last menu or let the unit idle 30 seconds to exit menu mode.Please refer to the following diagram to address your DMX512 channel for the first 4 units.

Channel mode	Unit 1 Address	Unit 2 Address	Unit 3 Address	Unit 4 Address
34 CH	1	35	69	103
25 CH	1	26	51	76
29 CH	1	30	59	88

4.Channel setting

Press MENU button to ENTER menu mode, select DMX Settings, press Enter button to confirm, select DMX channel mode, and press
The current channel mode will be displayed on the display screen. Use the UP/DOWN button to select Mode 1 (34),
For Mode 2 (25) or Mode 3 (29), press ENTER button to save.
The main menu page will display the address code of the next unit of the same fixture, and calculate the address code

5.Fixture size

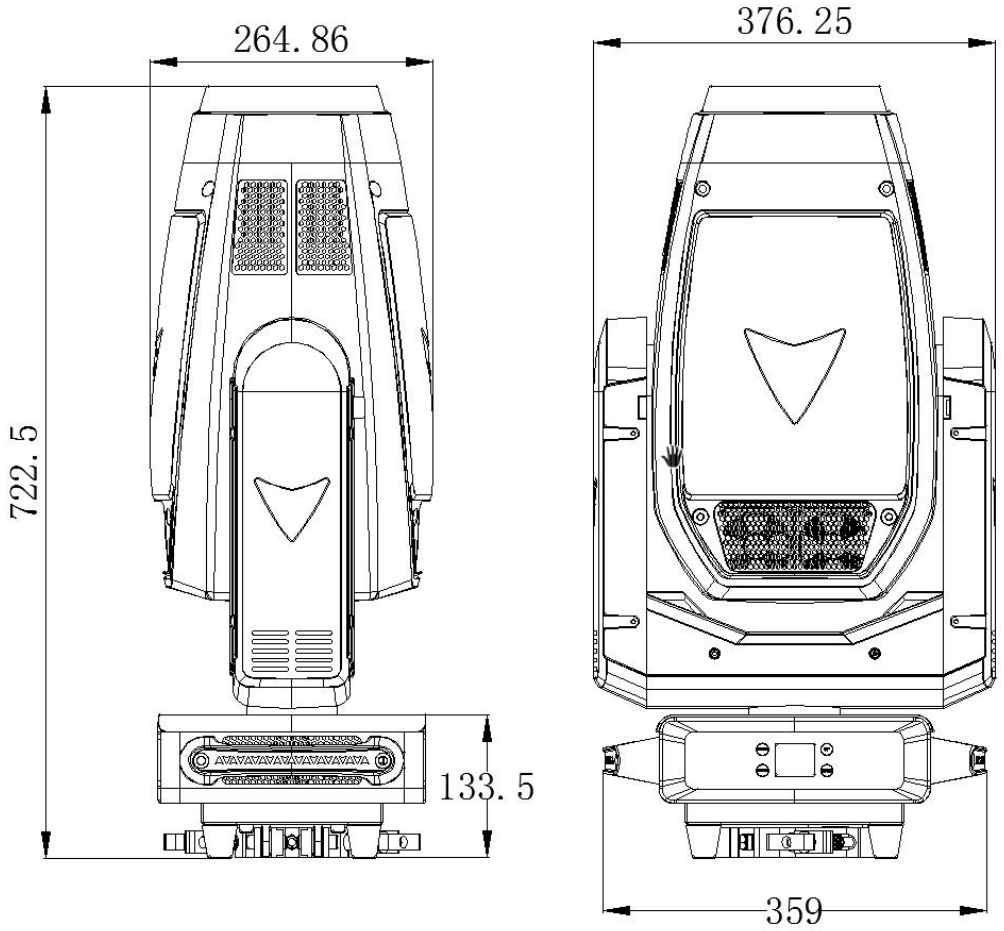

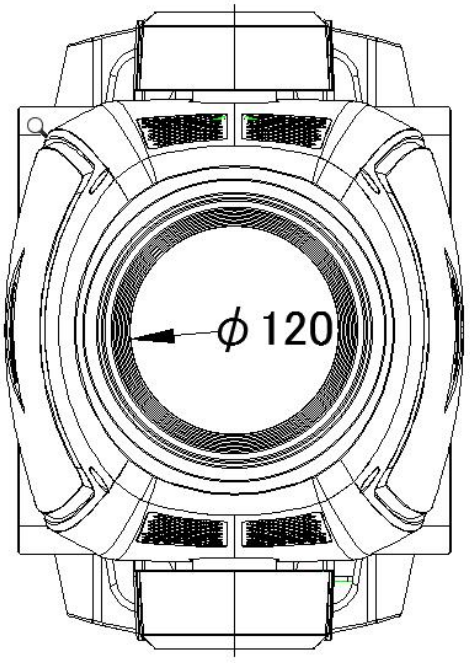

6.Illuminance chart:

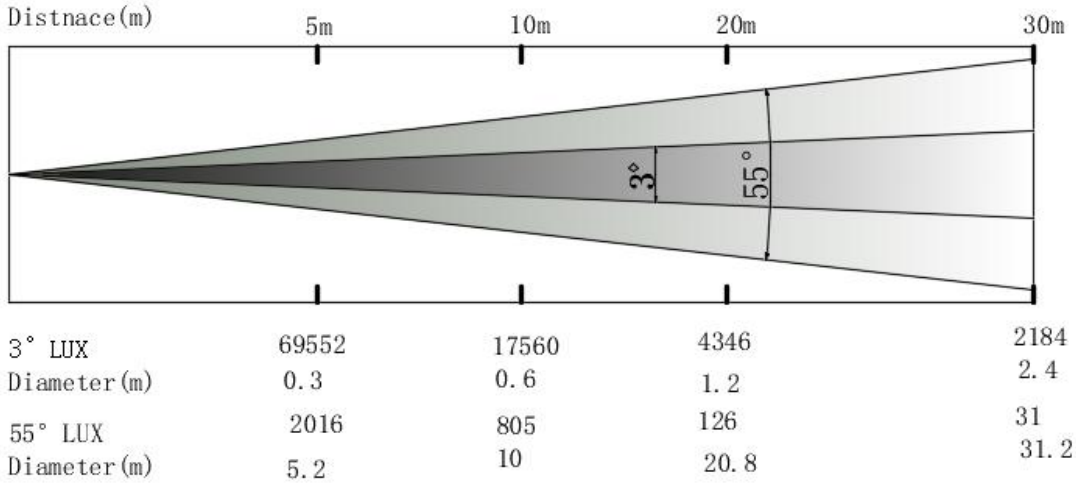

7. Effect wheels

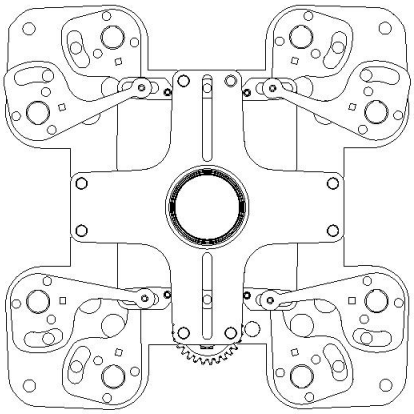

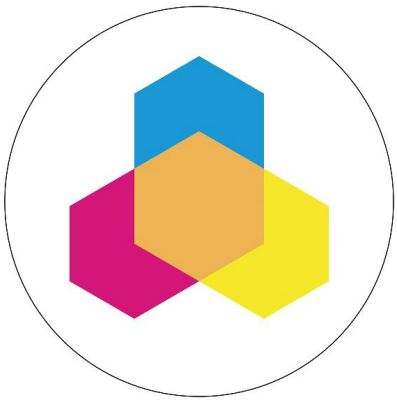

cutting disk **CMY+CTO**

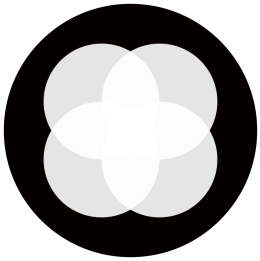

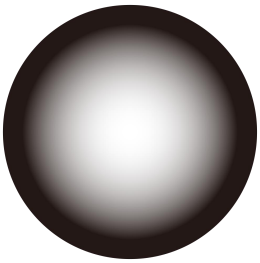

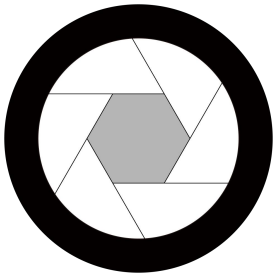

4Prism **Frost** **iris**

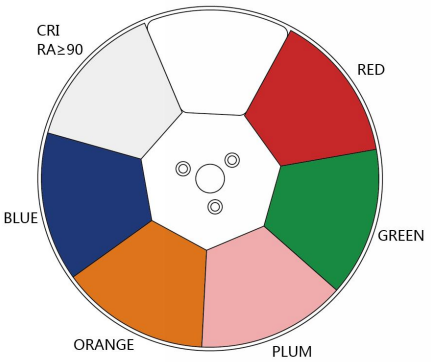

COLOR WHEEL

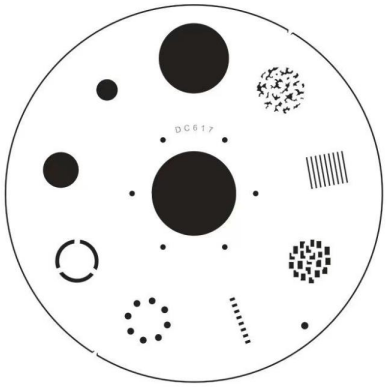

STATIC GOBO WHEEL

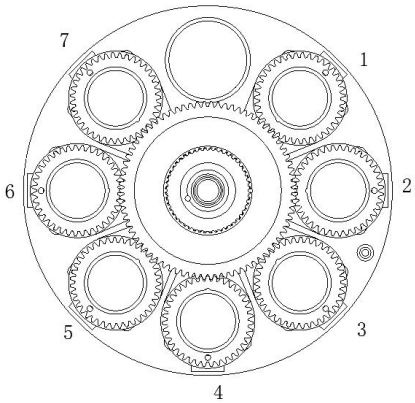

ROBATING GOBO WHEEL

Rotation Gobo

1 2 3 4 5 6 7

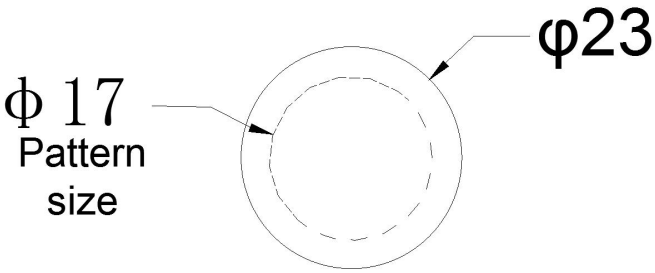

8. Lamp technical parameters

Input Voltage: 100-240V, 50/60Hz
Output Voltage: V1:48V 12.5A(light source), V2:24V8A(a main board)
Power consumption: 600 W
Power supply: 800W
Light source: 600W Module LED Engine
Lifetime:⩾20,000Hours
Color temperature: 8500K
Linear CTO color temperature adjustment (2700K-7000K)
Standard color rendering index Ra ⩾ 70
High color rendering index Ra ⩾ 90
Diameter of optic lens: 120mm
Beam angle: 3° -55°
Linear CMY color mixing system
Color wheel: 1 color wheel, 5 fixed colors that can be rotated in both directions
Fixed Gobo : 1 fixed gobo ,8 fixed gobo
Rotation Gobo: 1 rotating gobo , 7 Rotation Gobo, patterns can be replaced
Prism: 4 prisms that can be rotated in both directions (prism angle 14 °)
Two independent frost tablets (Mild and moderate) can be used in combination
Cutting system: 4 grating to achieve fast and smooth cutting, each grating cutting direction and Angle can be independently controlled; The entire cutting module can be rotated 90°
0-100% 16bit smooth dimming(Four dimming modes)
Adjustable refresh frequency, HD camera shooting without flicker
More strobe effects, variable speed
DMX Channel: 35/39/34CH
Operate mode: DMX512, master/slave, RDM(Art-Net Optional)
Electronic autofocus
Outstanding strobe effect with variable speed
Control panel: LCD touch screen, touch buttons with backlight
Intelligent protection of overheat temperature
Built-in lithium battery, no power can also operate the menu Settings
X-axis rotation angle: 540°
Y-axis rotation angle: 270°
P/T: 16 bit precision scanning, no deviation
XY axis magnetic coding positioning is more accurate
Three phase motor with SY Brand
Signal Outlet: standard 3 PIN XLR /5PIN XLR socket,(Customizable ART-NET)
Standard with 50MM folding fixture
Fixture size: 376x265x723mm
Net weight: 27KG

characteristic

S711 set light beam, spot, wash and cutting functions in one, pure color, uniform spot, color plate, glass gobo plate, CTO, CRI plate are schott materiall, small appearance, light weight, its base is small and delicate, help reduce the weight of the lamp, linear CMY color mixing system, Provides rich color saturation and clear seamless color transitions. LED adopts energy-saving and environment-friendly 600W monochrome LED light engine, which can produce extremely high light output white light, color temperature of 8000K, light flux of light source up to 34,000lm. The 120mm diameter high quality optical lens produces a very uniform spot, CRIRA⩾90, and zoom range 3° - 55,The cutting system consists of 4 gratings, which can be rotated ± 45°, giving designers unlimited spot creativity. Two high brightness atomizing pieces of new materials can be respectively inserted and superimposed. With 14° prism, achieve rich prism effect, and adapt to 3pin/5pinXLR interface. ATR-NET can be customized, standard with fast loading and unloading fast lock light hook, 16BIT dimming, a variety of dimming mode switching options,High refresh rate, no flicker under high-definition camera, intelligent fan temperature control, switching to multi fan mode

9. Menu Description

First level menu	Secondary menu	Level 3 Menu	Fourth level menu	Five level menu	
DMX set up	DMX address	1 - 512			
	Channel mode	mode1(34)			
		mode2(25)			
		mode3(29)			
Effect set up	Horizontal reversal	no			
		yes			
	Vertical reverse	no			
		yes			
	Horizontal/vertical feedback	close			
		open			
	Dimming curve	Straight line			
		Square law			
		Inverse square law			
		s-curve			

	Dimming frequency	1200Hz			
		2400Hz			
		4000Hz			
		6000Hz			
		25000Hz			
	Dimming speed	fast			
		slow			
	No-signal mode	keep			
		Black field			
	Fan mode	automatic			
		Low speed			
		High speed			
	Display setting	Display direction	normal		
			Rotate 180°		
		Display brightness	1-100		
		Temperature unit	° C		
			° F		
		language	English		
			Chinese		
	power switch	no			
		yes			
Motor reset	X/Y	no			
		yes			
	Gobo module	no			
		yes			
	Cutting module	no			
		yes			
	ZOOM module				
	ALL	no			
		yes			
Equipment detection	Full test	In the test...			
	Effect test	level			
		vertical			

		cyan			
		Rose red			
		yellow			
		Color temperature			
		Color			
		Rotation Gobo			
		Gobo Rotation			
		Fixed Gobo			
		iris			
		prism			
		Rotation of prism			
		frost 1			
		frost 2			
		zoom			
		focus			
		strobe			
		dimmer			
		Cut rotation			
		Cut down 1			
		Cut down 2			
		Cut on1			
		Cut on 2			
		Cut left1			
		Cut left2			
		Cut right1			
		Cut right2			
DMX Live	Channel list	0 - 255			
manual control	Channel list	0 - 255			
service	password	correction	Motor calibration	PAN	-128 -> 127
				TILT	-128 -> 127
				cyan	-128 -> 127

				Rose red	-128 -> 127
				yellow	-128 -> 127
				Color tempera ture	-128 -> 127
				Color	-128 -> 127
				Rotation gobo	-128 -> 127
				gobo rotation	-128 -> 127
				Fixed gobo	-128 -> 127
				iris	-128 -> 127
				prism	-128 -> 127
				Rotation of prism	-128 -> 127
				frost 1	-128 -> 127
				frost 2	-128 -> 127
				zoom	-128 -> 127
				focus	-128 -> 127
				strobe	-128 -> 127
				dimmer	-128 -> 127
				Cut rotation	-128 -> 127
				Cut down 1	-128 -> 127
				Cut down 2	-128 -> 127
				Cut on1	-128 -> 127
				Cut on 2	-128 -> 127

				Cut left1	-128 -> 127
				Cut left2	-128 -> 127
				Cut right1	-128 -> 127
				Cut right2	-128 -> 127
			LED calibration	dimmer	0 -> 255
		factory data reset	no		
			yes		
		Clear the device running time	no		
			yes		
		Clear LED uptime	no		
			yes		
Device information	Equipment operation time	xxxxxH			
	LED running time	xxxxxH			
	Device version	1U：Vxx			
		2U：Vxx			
		3U：Vxx			
		4U：Vxx			
		5U：Vxx			
		6U：Vxx			
	RDM UID	0xXXXX-XXXX XXXX			
	temperature	LED			

10.Channel

34 Channels (Mode1)

CH	Function	Value			Effect
1	Pan	000	-	255	Pan
2	Pan Fine	000	-	255	Pan Fine
3	Tilt	000	-	255	Tilt
4	Tilt Fine	000	-	255	Tilt Fine
5	P/T Speed	000	-	255	Fast to slow
6	C	000	-	255	0-100%
7	M	000	-	255	0-100%
8	Y	000	-	255	0-100%
9	CTO	000	-	255	0-100%
10	Color	000	-	010	white light
		011	-	023	color1
		024	-	036	color2
		037	-	049	color3
		050	-	062	color4
		063	-	075	color5
		076	-	088	color6
		089	-	101	Half color1
		102	-	114	Half color2
		115	-	127	Half color3
		128	-	140	Half color4
		141	-	153	Half color5
		154	-	166	Half color6
		167	-	179	Half color7
		180	-	187	white light
		188	-	219	Rotate forward, going from

					fast to slow
		220	-	223	stop
		224	-	255	Reverse rotation, speed from fast to slow
11	Rotation Gobo	000	-	009	white light
		010	-	019	Gobo1
		020	-	029	Gobo2
		030	-	039	Gobo3
		040	-	049	Gobo4
		050	-	059	Gobo5
		060	-	069	Gobo6
		070	-	079	Gobo7
		080	-	089	Gobo1shake
		090	-	099	Gobo2shake
		100	-	109	Gobo3shake
		110	-	119	Gobo4shake
		120	-	129	Gobo5shake
		130	-	139	Gobo6shake
		140	-	149	Gobo7shake
		150	-	159	white light
		160	-	207	Rotate forward, going from fast to slow
		208	-	255	Reverse rotation, slow to fast
12	Gobo Rotation	000	-	127	0 - 360°
		128	-	187	Rotate forward, going from fast to slow
		188	-	195	stop
		196	-	255	Reverse rotation, speed from fast to slow
13	Fixed Gobo	000	-	006	white light
		007	-	013	Gobo1

		014	-	020	Gobo2
		021	-	027	Gobo3
		028	-	034	Gobo4
		035	-	041	Gobo5
		042	-	048	Gobo6
		049	-	055	Gobo7
		056	-	069	Gobo8
		070	-	079	Gobo1shake
		080	-	089	Gobo2shake
		090	-	099	Gobo3shake
		100	-	109	Gobo4shake
		110	-	119	Gobo5shake
		120	-	129	Gobo6shake
		130	-	139	Gobo7shake
		140	-	149	Gobo8shake
		150	-	159	white light
		160	-	207	Rotate forward, going from fast to slow
		208	-	255	Reverse rotation, slow to fast
14	iris	000	-	127	0-100%
		128	-	159	Slow in fast out from slow to fast
		160	-	191	Fast in slow out from slow to fast
		192	-	255	Fast in and fast out from slow to fast
15	prism	000	-	009	No function
		010	-	255	Prism cut
16	Prism Rotation	000	-	063	0 - 360°
		064	-	127	Rotate forward, going from fast to slow
		128	-	191	Reverse rotation, slow to fast

		192	-	207	90° shake
		208	-	223	180° shake
		224	-	239	270° shake
		240	-	255	360° shake
17	CRI	000	-	009	CRI close
		010	-	255	CRI open
18	frost1	000	-	009	No function
		010	-	255	Frost cut
19	Frost2	000	-	009	No function
		010	-	255	frost cut
20	zoom	000	-	255	The Angle goes from large to small
21	focus	000	-	255	0-100%
22	strobe	000	-	063	No function (open light)
		064	-	095	Common stroboscope 1Hz to 20Hz
		096	-	127	No function (open light)
		128	-	159	Pulse stroboscope 1Hz-20Hz
		160	-	191	No function (open light)
		192	-	223	Random ordinary stroboscopic
		224	-	255	No function (open light)
23	dimmer	000	-	255	Dimming 0% to 100%
24	Dimmer fine	000	-	255	Dimming fine 0 to 100%
25	Cut rotation	000	-	255	0-90°
26	Cut down 1	000	-	255	0-100%
27	Cut down 2	000	-	255	0-100%
28	Cut on1	000	-	255	0-100%
29	Cut on 2	000	-	255	0-100%
30	Cut left1	000	-	255	0-100%
31	Cut left2	000	-	255	0-100%

32	Cut right1	000	-	255	0-100%
33	Cut right2	000	-	255	0-100%
34	Function settings	000	-	010	No function
		011	-	020	Dimming curve: straight line
		021	-	030	Dimming curve: square law
		031	-	040	Dimming curve: inverse square law
		041	-	050	Dimming curve: S- curve
		051	-	060	Fan mode: Auto
		061	-	070	Fan mode: Low speed
		071	-	080	Fan mode: High speed
		081	-	090	Dimming frequency：1200Hz
		091	-	100	Dimming frequency：2400Hz
		101	-	110	Dimming frequency：4000Hz
		111	-	120	Dimming frequency：6000Hz
		121	-	130	Dimming frequency：25000Hz
		131	-	140	Dimming speed: fast
		141	-	150	Dimming speed: Slow
		151	-	160	Reset all motors
		161	-	170	P/T motor reset
		171	-	180	Head motor reset
		181	-	190	No function
		191	-	200	No function
		201	-	210	No function
		211	-	220	No function
		221	-	230	No function
		231	-	255	No function

25 Channels (Mode2)

CH	Function	Value			Effect
1	Pan	000	-	255	Pan
2	Pan Fine	000	-	255	Pan Fine
3	Tilt	000	-	255	Tilt
4	Tilt Fine	000	-	255	Tilt Fine
5	P/T Speed	000	-	255	Fast to slow
6	C	000	-	255	0-100%
7	M	000	-	255	0-100%
8	Y	000	-	255	0-100%
9	CTO	000	-	255	0-100%
10	Color	000	-	010	white light
		011	-	023	color1
		024	-	036	color2
		037	-	049	color3
		050	-	062	color4
		063	-	075	color5
		076	-	088	color6
		089	-	101	Half color1
		102	-	114	Half color2
		115	-	127	Half color3
		128	-	140	Half color4
		141	-	153	Half color5
		154	-	166	Half color6
		167	-	179	Half color7
		180	-	187	white light
		188	-	219	Rotate forward, going from fast to slow
		220	-	223	stop

		224	-	255	Reverse rotation, speed from fast to slow
11	Rotation Gobo	000	-	009	white light
		010	-	019	Gobo1
		020	-	029	Gobo2
		030	-	039	Gobo3
		040	-	049	Gobo4
		050	-	059	Gobo5
		060	-	069	Gobo6
		070	-	079	Gobo7
		080	-	089	Gobo1shake
		090	-	099	Gobo2shake
		100	-	109	Gobo3shake
		110	-	119	Gobo4shake
		120	-	129	Gobo5shake
		130	-	139	Gobo6shake
		140	-	149	Gobo7shake
		150	-	159	white light
		160	-	207	Rotate forward, going from fast to slow
		208	-	255	Reverse rotation, slow to fast
12	Gobo Rotation	000	-	127	0 - 360°
		128	-	187	Rotate forward, going from fast to slow
		188	-	195	stop
		196	-	255	Reverse rotation, speed from fast to slow
13	Fixed Gobo	000	-	006	white light
		007	-	013	Gobo1
		014	-	020	Gobo2
		021	-	027	Gobo3

		028	-	034	Gobo4
		035	-	041	Gobo5
		042	-	048	Gobo6
		049	-	055	Gobo7
		056	-	069	Gobo8
		070	-	079	Gobo1shake
		080	-	089	Gobo2shake
		090	-	099	Gobo3shake
		100	-	109	Gobo4shake
		110	-	119	Gobo5shake
		120	-	129	Gobo6shake
		130	-	139	Gobo7shake
		140	-	149	Gobo8shake
		150	-	159	white light
		160	-	207	Rotate forward, going from fast to slow
		208	-	255	Reverse rotation, slow to fast
14	iris	000	-	127	0-100%
		128	-	159	Slow in fast out from slow to fast
		160	-	191	Fast in slow out from slow to fast
		192	-	255	Fast in and fast out from slow to fast
15	prism	000	-	009	No function
		010	-	255	Prism cut
16	Prism Rotation	000	-	063	0 - 360°
		064	-	127	Rotate forward, going from fast to slow
		128	-	191	Reverse rotation, slow to fast
		192	-	207	90° shake
		208	-	223	180° shake

		224	-	239	270° shake
		240	-	255	360° shake
17	CRI	000	-	009	CRI close
		010	-	255	CRI open
18	frost1	000	-	009	No function
		010	-	255	Frost cut
19	Frost2	000	-	009	No function
		010	-	255	frost cut
20	zoom	000	-	255	The Angle goes from large to small
21	focus	000	-	255	0-100%
22	strobe	000	-	063	No function (open light)
		064	-	095	Common stroboscope 1Hz to 20Hz
		096	-	127	No function (open light)
		128	-	159	Pulse stroboscope 1Hz-20Hz
		160	-	191	No function (open light)
		192	-	223	Random ordinary stroboscopic
		224	-	255	No function (open light)
23	dimmer	000	-	255	Dimming 0% to 100%
24	Dimmer fine	000	-	255	Dimming fine 0 to 100%
25	Function settings	000	-	010	No function
		011	-	020	Dimming curve: straight line
		021	-	030	Dimming curve: square law
		031	-	040	Dimming curve: inverse square law
		041	-	050	Dimming curve: S- curve
		051	-	060	Fan mode: Auto
		061	-	070	Fan mode: Low speed
		071	-	080	Fan mode: High speed

		081	-	090	Dimming frequency：1200Hz
		091	-	100	Dimming frequency：2400Hz
		101	-	110	Dimming frequency：4000Hz
		111	-	120	Dimming frequency：6000Hz
		121	-	130	Dimming frequency：25000Hz
		131	-	140	Dimming speed: fast
		141	-	150	Dimming speed: Slow
		151	-	160	Reset all motors
		161	-	170	P/T motor reset
		171	-	180	Head motor reset
		181	-	190	No function
		191	-	200	No function
		201	-	210	No function
		211	-	220	No function
		221	-	230	No function
		231	-	255	No function

29 Channels (Mode3)

CH	Function	Value			Effect
1	Pan	000	-	255	Pan
2	Pan Fine	000	-	255	Pan Fine
3	Tilt	000	-	255	Tilt
4	Tilt Fine	000	-	255	Tilt Fine
5	P/T Speed	000	-	255	Fast to slow
6	C	000	-	255	0-100%
7	M	000	-	255	0-100%
8	Y	000	-	255	0-100%

9	CTO	000	-	255	0-100%
10	Color	000	-	010	white light
		011	-	023	color1
		024	-	036	color2
		037	-	049	color3
		050	-	062	color4
		063	-	075	color5
		076	-	088	color6
		089	-	101	Half color1
		102	-	114	Half color2
		115	-	127	Half color3
		128	-	140	Half color4
		141	-	153	Half color5
		154	-	166	Half color6
		167	-	179	Half color7
		180	-	187	white light
		188	-	219	Rotate forward, going from fast to slow
		220	-	223	stop
		224	-	255	Reverse rotation, speed from fast to slow
11	iris	000	-	127	0-100%
		128	-	159	Slow in fast out from slow to fast
		160	-	191	Fast in slow out from slow to fast
		192	-	255	Fast in and fast out from slow to fast
12	CRI	000	-	009	CRI close
		010	-	255	CRI open
13	frost1	000	-	009	No function
		010	-	255	Frost cut

14	frost1	000	-	009	No function
		010	-	255	frost cut
15	zoom	000	-	255	The Angle goes from large to small
16	focus	000	-	255	0-100%
17	strobe	000	-	063	No function (open light)
		064	-	095	Common stroboscope 1Hz to 20Hz
		096	-	127	No function (open light)
		128	-	159	Pulse stroboscope 1Hz-20Hz
		160	-	191	No function (open light)
		192	-	223	Random ordinary stroboscopic
		224	-	255	No function (open light)
18	dimmer	000	-	255	Dimming 0% to 100%
19	Dimmer fine	000	-	255	Dimming fine 0 to 100%
20	Cut rotation	000	-	255	0-90°
21	Cut down 1	000	-	255	0-100%
22	Cut down 2	000	-	255	0-100%
23	Cut on1	000	-	255	0-100%
24	Cut on 2	000	-	255	0-100%
25	Cut left1	000	-	255	0-100%
26	Cut left2	000	-	255	0-100%
27	Cut right1	000	-	255	0-100%
28	Cut right2	000	-	255	0-100%
29	Function settings	000	-	010	No function
		011	-	020	Dimming curve: straight line
		021	-	030	Dimming curve: square law
		031	-	040	Dimming curve: inverse square law
		041	-	050	Dimming curve: S- curve

		051	-	060	Fan mode: Auto
		061	-	070	Fan mode: Low speed
		071	-	080	Fan mode: High speed
		081	-	090	Dimming frequency：1200Hz
		091	-	100	Dimming frequency：2400Hz
		101	-	110	Dimming frequency：4000Hz
		111	-	120	Dimming frequency：6000Hz
		121	-	130	Dimming frequency：25000Hz
		131	-	140	Dimming speed: fast
		141	-	150	Dimming speed: Slow
		151	-	160	Reset all motors
		161	-	170	P/T motor reset
		171	-	180	Head motor reset
		181	-	190	No function
		191	-	200	No function
		201	-	210	No function
		211	-	220	No function
		221	-	230	No function
		231	-	255	No function

11.Troubleshooting

Following are a few common problems that may occur during operation. Here are some
suggestions for troubleshooting:

A. The unit does not work, no light and the fan does not work

1. Check the connected power and main fuse.
2. Measure the voltage.
3. Check the power indicator to see whether it can be lit up or not.

B. Not responding to the DMX controller

1. Check whether the DMX connectors and the DMX cables are connected correctly.

2. Check whether the DMX address is correctly set.
3. If the intermittent DMX signal problem occurs, check whether the XLR socket and the signal
cable are well connected.
4. Try it with another DMX controller.
5. Check whether the DMX cables run near or alongside to the high-voltage cables, which may
damage or interfere with the signal circuit.

C. One of the channels is not working well

1. The stepper motor might be damaged or the cable connected to the PCB might be broken.
2. The motor's drive IC on the PCB might be out of condition.

12.Fixture cleaning

It is absolutely essential that the fixture is kept clean to ensure the maximum light-output and allow
the fixture to function reliably throughout its life. The fixture must be cleaned regularly to avoid dust,
dirt and smoke-fluid residues building up on or within the fixture. The cleaning frequency depends on
the application environment. Clean the fixture immediately if the dust enters it to avoid damage to
the optical lens due to excessive dust.

A soft lint-free cloth moistened with any good glass cleaning fluid is recommended, under no
circumstances should solvents be used.

Always dry the parts carefully.

Clean the external optical lens at least every 20 days and the internal optical lens every 30 days.